TERMINAL TYPES:

- HONEYWELL RM 7800 SUBBASE
- COMPRESSION
- MOLEX CONNECTOR
- MALE SPADE TERMINAL
- FEMALE SPADE TERMINAL
- RJ11 OR RJ45 CONNECTOR

RELAY / SWITCH TERMINALS:
C = COMMON
NC = NORM. CLOSED
NO = NORM. OPEN

NOTES:
1. IF LOW WATER CUTOFF (LWCO) IS SHIPPED LOOSE DISCONNECT WIRE, LABELED P10-89/LWCO 3, FROM VESTIBULE THERMAL FUSE AND CONNECT TO LWCO TERMINAL 3 AND CONNECT LWCO TERMINAL 5 TO VESTIBULE THERMAL FUSE.
2. FACTORY WIRING, LOW VOLTAGE IS 24VAC UNLESS OTHERWISE INDICATED.
3. THE VALID INPUT SIGNAL RANGE FOR TERMINALS (C+,C-) IS 1-9VDC. A SIGNAL ABOVE OR BELOW THIS RANGE IS RECOGNIZED AS A 'SOFT' ALARM. AS A RESULT, THE CONTROL FUNCTION IS IGNORED.
4. IF THE REMOTE ON/OFF(ENABLE/DISABLE) SWITCH IS NOT ORDERED, JUMPER TERMINAL RO TO TERMINAL C ON THE TSBC. WHEN IT IS ORDERED, THE SWITCH IS FACTORY SUPPLIED & THE CONTACTS ARE FIELD SUPPLIED.
5. CUT JUMPERS 5, 6, 7, 8, AND 9.

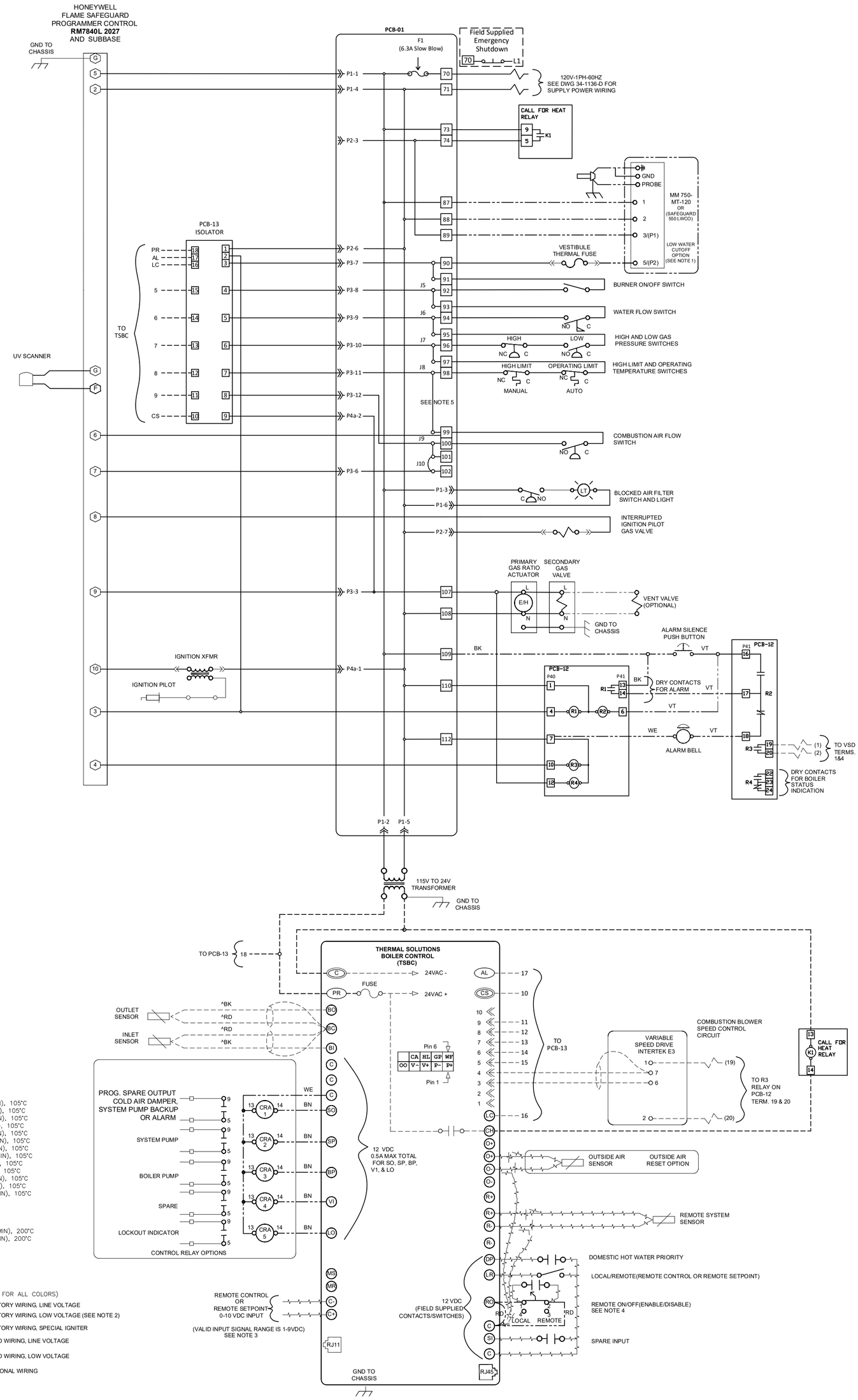

WIRE COLORS:
*BK = BLACK, 12AWG (MIN), 105°C
*WE = WHITE, 12AWG (MIN), 105°C
*GN = GREEN, 12AWG (MIN), 105°C
BE = BLUE, 18AWG (MIN), 105°C
BK = BLACK, 18AWG (MIN), 105°C
BN = BROWN, 18AWG (MIN), 105°C
GN = GREEN, 18AWG (MIN), 105°C
OE = ORANGE, 18AWG (MIN), 105°C
PK = PINK, 18AWG (MIN), 105°C
RD = RED, 18AWG (MIN), 105°C
VT = VIOLET, 18AWG (MIN), 105°C
WE = WHITE, 18AWG (MIN), 105°C
YW = YELLOW, 18AWG (MIN), 105°C
^CL = SHIELDED CLEAR
^WE = SHIELDED WHITE
^BK = SHILEDED BLACK
^RD = SHIELDED RED
^^GN = GREEN, 18AWG (MIN), 200°C
^^WE = WHITE, 18AWG (MIN), 200°C

RELAY/SWITCH TERMINALS:
C = COMMON
NC = NORM. CLOSED
NO = NORM. OPEN

WIRE TYPES:
(BLACK COLOR SHOWN, TYPICAL FOR ALL COLORS)
FACTORY WIRING, LINE VOLTAGE
FACTORY WIRING, LOW VOLTAGE (SEE NOTE 2)
FACTORY WIRING, SPECIAL IGNITER
FIELD WIRING, LINE VOLTAGE
FIELD WIRING, LOW VOLTAGE
OPTIONAL WIRING

REFERENCE ASME Y14.5M-1994 FOR GEOMETRIC TOLERANCES. ALL DIMENSIONS IN INCHES. DRAWING NOT TO BE SCALED. NON-BASIC DIMENSIONAL AND ANGULAR TOLERANCES UNLESS OTHERWISE NOTED:
DECIMALS: X.X - ±0.1, X.XX - ±0.03, X.XXX - ±0.005. FRACTIONAL: ±1/32. ANGULAR: ±1°

THIS DOCUMENT CONTAINS CONFIDENTIAL INFORMATION WHICH IS THE PROPERTY OF THERMAL SOLUTIONS LLC. THIS DOCUMENT MAY NOT BE REPRODUCED, TRANSFERRED OR USED, OR ITS CONTENTS DISCLOSED, WITHOUT THE WRITTEN PERMISSION OF THE OWNER.

SUPERCEDES:
34-1135-C, 34-1180-C

PROPERTY OF
Thermal Solutions Products LLC
LANCASTER, PA 17604-3244

REV:	EN:	DATE:	DWN:	CHKD:	APPD:	APPD:
7	34-1881	03/30/2023	AL	SPS		

CORRECTED PCB12-20 CONNECTION NOTE TO (2)

TITLE
LADDER WIRING DIAGRAM
CONTROL CIRCUIT W/
RM7896D 2027 PROGRAMMER CONTROL, EVS-500/3000

DRAWING NUMBER	SCALE	DWG SIZE	SHEET
34-1316-C	NONE	C	1 OF 1